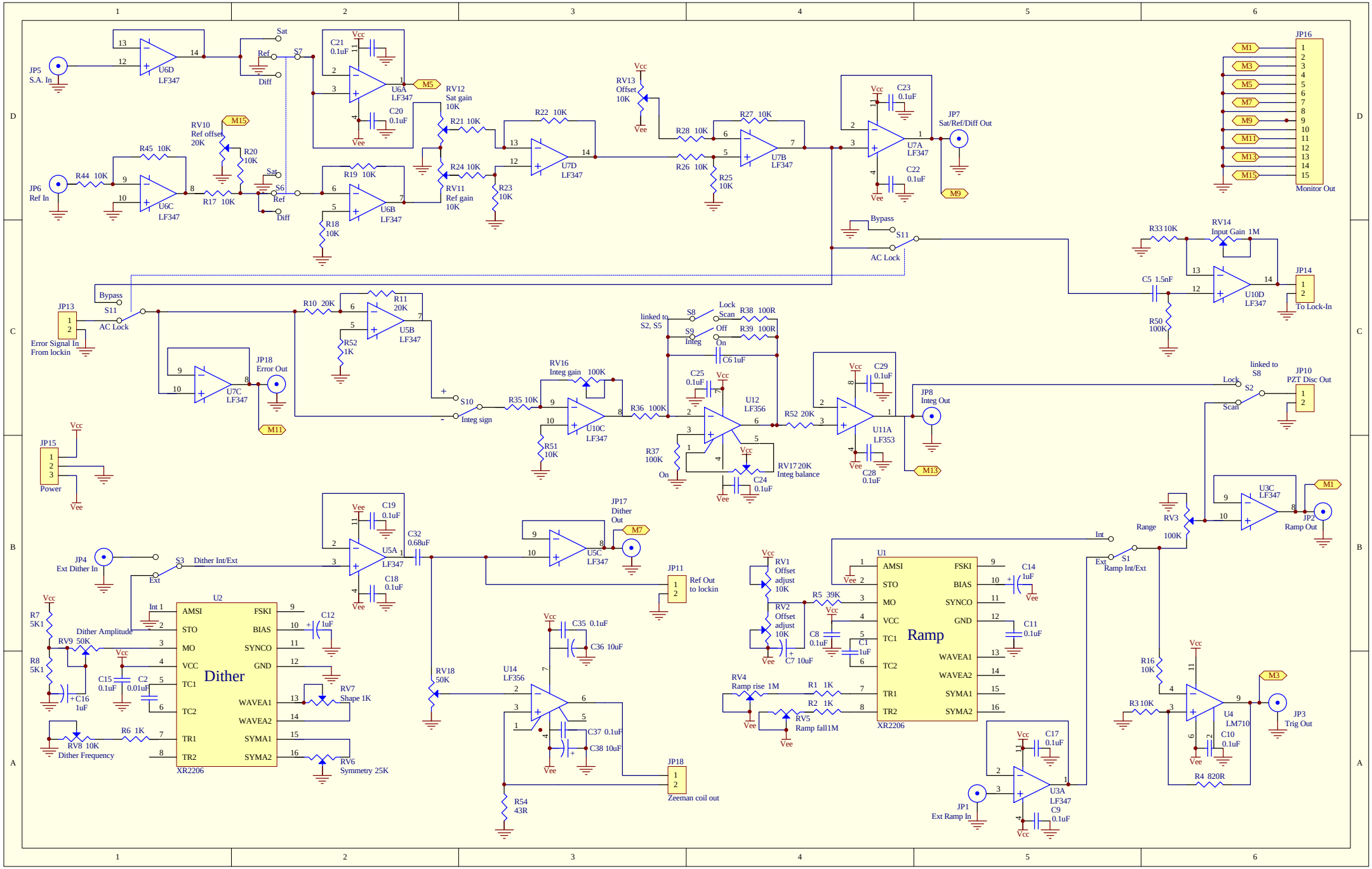
JP5
S.A. In
U6D
LF347
Sat
Ref
Diff
S7
C21
0.1uF
Vcc
U6A
LF347
C20
0.1uF
Vee
M5
RV12
Sat gain
10K
R21 10K
R22 10K
U7D
LF347
RV13
Offset
10K
R28 10K
R27 10K
U7B
LF347
R26 10K
R25
10K
C23
0.1uF
U7A
LF347
C22
0.1uF
JP7
Sat/Ref/Diff Out
M9
JP16
M1
M3
M5
M7
M9
M11
M13
M15
Monitor Out
RV10
Ref offset
20K
M15
R20
10K
R45 10K
JP6
Ref In
R44 10K
U6C
LF347
R17 10K
S6
R19 10K
U6B
LF347
R18
10K
R24 10K
RV11
Ref gain
10K
R23
10K
Bypass
S11
AC Lock
R33 10K
RV14
Input Gain 1M
C5 1.5nF
U10D
LF347
JP14
To Lock-In
R50
100K
JP13
Error Signal In
From lockin
R10 20K
R11
20K
U5B
LF347
R52
1K
U7C
LF347
JP18
Error Out
M11
S10
Integ sign
RV16
Integ gain 100K
R35 10K
U10C
LF347
R51
10K
R36 100K
linked to
S2, S5
S8
Lock
Scan
R38 100R
S9
Integ
Off
On
R39 100R
C6 1uF
C25
0.1uF
U12
LF356
R37
100K
On
RV17 20K
Integ balance
C24
0.1uF
R52 20K
C29
0.1uF
U11A
LF353
C28
0.1uF
JP8
Integ Out
M13
linked to
S8
JP10
PZT Disc Out
Lock
S2
Scan
JP15
Power
U3C
LF347
M1
JP2
Ramp Out
RV3
100K
Range
Int
Ext
S1
Ramp Int/Ext
JP4
Ext Dither In
S3
Dither Int/Ext
Ext
C19
0.1uF
U5A
LF347
C18
0.1uF
C32
0.68uF
U5C
LF347
JP17
Dither
Out
M7
JP11
Ref Out
to lockin
R7
5K1
R8
5K1
Dither Amplitude
RV9 50K
C16
1uF
C15
0.1uF
C2
0.01uF
Int 1
U2
AMSI
STO
MO
VCC
TC1
TC2
TR1
TR2
FSKI
BIAS
SYNCO
GND
WAVEA1
WAVEA2
SYMA1
SYMA2
Dither
XR2206
C12
1uF
RV7
Shape 1K
RV6
Symmetry 25K
R6 1K
RV8 10K
Dither Frequency
RV18
50K
U14
LF356
C35 0.1uF
C36 10uF
C37 0.1uF
C38 10uF
R54
43R
JP18
Zeeman coil out
RV1
Offset
adjust
10K
RV2
Offset
adjust
10K
C7 10uF
R5 39K
C8
0.1uF
C1
1uF
U1
Ramp
XR2206
C14
1uF
C11
0.1uF
RV4
Ramp rise 1M
R1 1K
R2 1K
RV5
Ramp fall1M
C17
0.1uF
U3A
LF347
C9
0.1uF
JP1
Ext Ramp In
R16
10K
R3 10K
U4
LM710
C10
0.1uF
R4 820R
M3
JP3
Trig Out