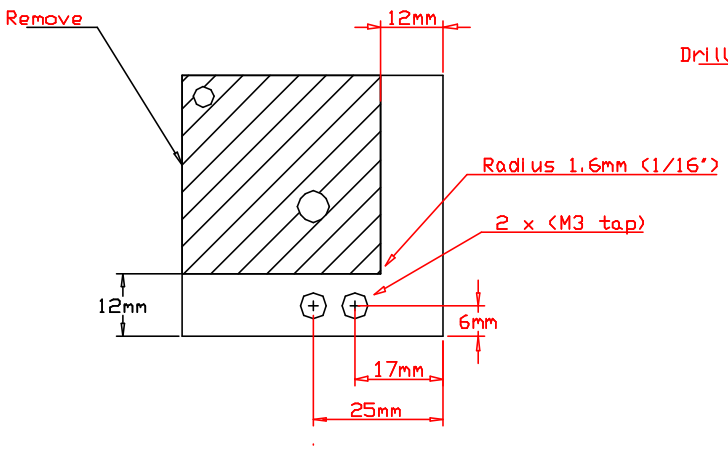

U100-P
Front
Plate
(top view)

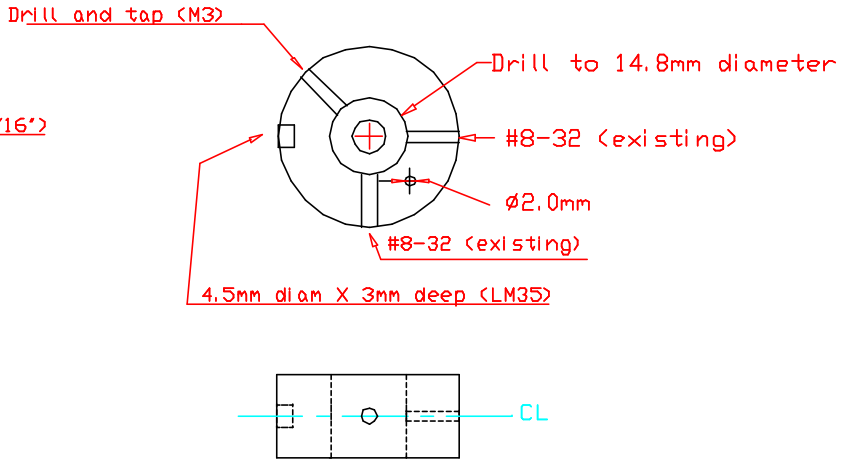

UPA-PA1
Adaptor
(top view)

MATERIAL: Provided	TOLERANCES: EXCEPT WHERE OTHERWISE STATED .1 MM	REQUIRED: Qty: 6	

TITLE: Diode Laser

MODS (#4 of 8)

UNIVERSITY OF MELBOURNE

SCHOOL OF PHYSICS

DRAWN	R. Scholten	SHEET SIZE	A4
DATE	6/3/00	FILE	diode_4
SCALE			